Height Adjustable Desk

MIGRATION SE

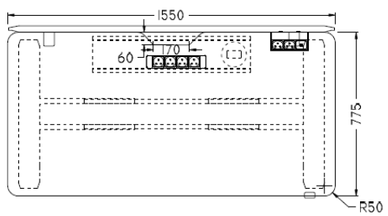

PLAN VIEW 1:20 ON A3

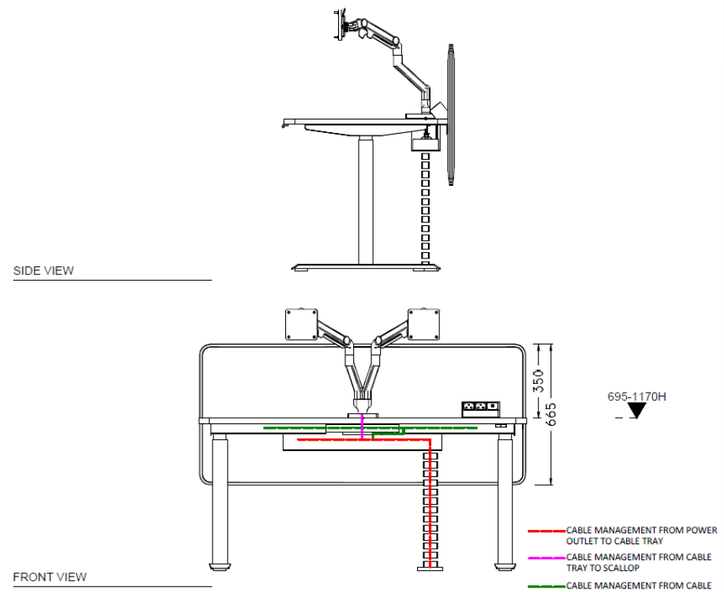

FRONT VIEW

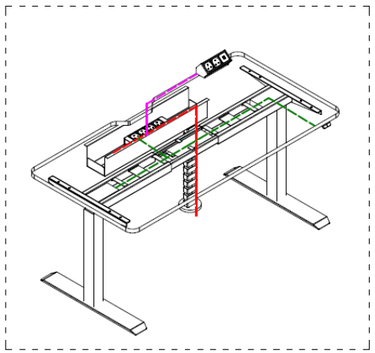

CABLE MANAGEMENT

CABLE MANAGEMENT FROM POWER OUTLET TO CABLE TRAY

CABLE MANAGEMENT FROM CABLE TRAY TO SCALLOP

CABLE MANAGEMENT FROM CABLE TRAY TO UNDERSTRUCTURE MOTOR

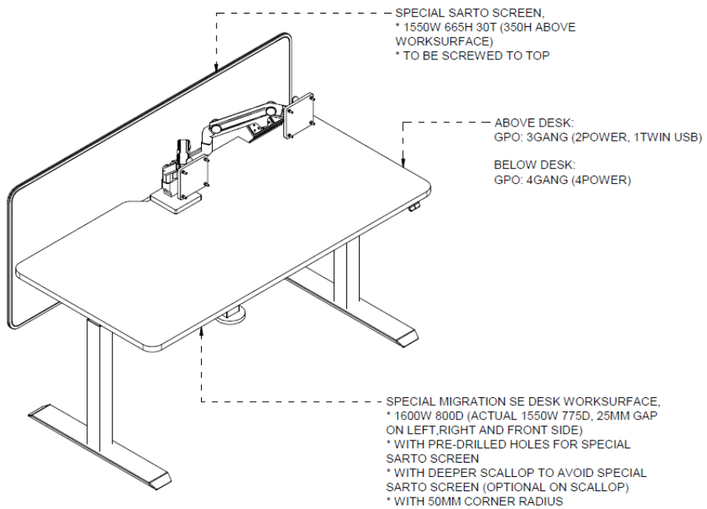

ISOMETRIC